Specific Data for a Good Sounding Guitar

Carbon:

1. Bare top must be .60 to .80K.
2. A weakest possible rim will permit.
3. Maximum longitudinal fans which make it bright on the high triad.
4. Holes should be at the maximum upper extension of the body.
5. A cross beam is desirable below holes.
6. Maximum fans spread desirable to give final K of around .075.
7. First resonance must fall on E, or very slightly above not over 84 cycles.
8. The region from 220 to 880 cycles must have both a fill and a hole.
9. Fill from 380 to 480 seems good vis-a-vis #2.
10. While a hole from 650 to 780 might be ok, to be a bright guitar the center peaks must equal or exceed 0 DB level. The wider the band width of these peaks the more influence on mid-range clarity and triad.

Based on several conferences at Ovation over many months, the final of which was 11/27/74, the consistent preference is for the big powerful bass response, coupled with a bright high triad, and then as much mid-range as possible recognizing that some drop out in the 600 cycle region is permiss ible.

This can only be achieved by tuning the low E peak on E. Either side of E from experience can introduce muddiness.

Next it is clear that the high triad sound is best augmented by resonance in the upper bout leading to the conclusion that holes at the upper most area would maximize top material available to resonate. A beam at the upper extremity would augment high frequency distribution in that area.

In conference comparison was drawn to Master #2 and Carbon 14-5. #2 was regarded as muddy and mushy on bass whereas 14-5 was likened to a Glenn Campbell model, i.e. all mid-range. It was felt that the success of the new custom Legend has been the clear power of the bass and therefore what people are most used to is the bigger bass and clear treble in high price guitars.

Concensus was to give bass power that they want. Glenn's taste is regarded as anomaly.

12/2/74

Specific Data for a Good Sounding Guitar

Carbon:

1. Bare top must be .60 to .80K.
2. A weakest possible rim will permit.
3. Maximum longitudinal fans which make it bright on the high triad.
4. Holes should be at the maximum upper extension of the body.
5. A cross beam is desirable below holes.
6. Maximum fans spread desirable to give final K of around .075.
7. First resonance must fall on E, or very slightly above not over 84 cycles.
8. The region from 220 to 880 cycles must have both a fill and a hole.
9. Fill from 380 to 480 seems good vis-a-vis #2.
10. While a hole from 650 to 780 might be ok, to be a bright guitar the center peaks must equal or exceed 0 DB level. The wider the band width of these peaks the more influence on mid-range clarity and triad.

Based on several conferences at Ovation over many months, the final of which was 11/27/74, the consistent preference is for the big powerful bass response, coupled with a bright high triad, and then as much mid-range as possible recognizing that some drop out in the 600 cycle region is permissible.

This can only be achieved by tuning the low E peak on E. Either side of E from experience can introduce muddiness.

Next it is clear that the high triad sound is best augmented by resonance in the upper bout leading to the conclusion that holes at the upper most area would maximize top material available to resonate. A beam at the upper extremity would augment high frequency distribution in that area.

In conference comparison was drawn to Master #2 and Carbon 14-5. #2 was regarded as muddy and mushy on bass whereas 14-5 was likened to a Glenn Campbell model, i.e. all mid-range. It was felt that the success of the new custom Legend has been the clear power of the bass and therefore what people are most used to is the bigger bass and clear treble in high price guitars.

Concensus was to give bass power that they want. Glenn's taste is regarded as anomaly.

12/2/74

7 February 1975

To: C. McDonough

From: A. L. Belbruno

Subject: Requirements for Graphite Tops before Bonding to Guitar Bowl.

1. Visual
   Outer surface
   (a) No voids or delaminations.
   (b) Minimum wood grain and butt joint showing through graphite fibers.
   (c) No fiber separations, "fish-eyes" or local wavy patterns.
   (d) No foreign material pick-up from mold surface.

   Inner Surface
   (a) No voids or delamination.
   (b) Fiber separations permitted under .030 inches.
2. Physical
   (a) Weight – 160-175 grams
   (b) Thickness – .045"-.050".
3. Mechanical
   (a) Deflection when tested in top deflection fixture – k = .60"-1.00"

A. L. Belbruno

7 February 1975

To: C. McDonough

From: A. L. Belbruno

Subject: Press Process for Fabrication of Graphite Tops

1. Cut 2 pieces of graphite 12 x 21.
   Cut 4 pieces of graphite 3 x 12.
   (Handle with care not to separate fibers.)
2. Select a sheet of veneer.
   (a) Dry for 2 hours at 220°F.
   (b) Sand both surfaces with sanding block to smooth off wood grain and butt joints and brush off with dry cloth (no solvent).
3. Mark center line of guitar top at 45° to the grain and then mark pencil outline of guitar top with slight excess all around.
4. Lay up graphite on both sides of veneer as shown below:

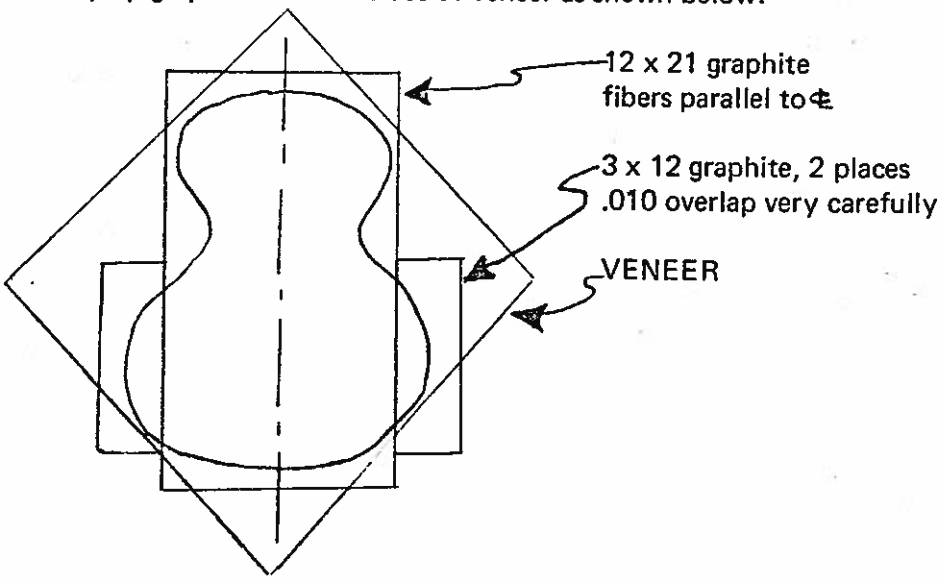

5. Lay top on surface plate as follows:
   (a) Thin teflon film to protect plate surface.
   (b) One layer of thin Armalon film (warp longitudinal).
   (c) Graphite top on top of Armalon.
   (d) .045 $\pm^{.000}_{.001}$ shims at least at both ends of top.
   Shims to be placed on top of the Armalon.
   (e) Nylon peel ply over top to extend over shims.
   Then cover nylon with thin teflon film to prevent sticking.
   (f) Place surface plate on heated press platen and close immediately with a minimum amount of preheat of surface plate.
   (g) Apply pressure to 80-100 psi or until platen contacts the .045 shims.

(h) Cure for 95 minutes at 250°-270°F.

6. Panel may be removed from hot press.
7. Cut panel to template size and submit for tests.

A. L. Belbruno